Via Roma, 110
14021 Albino (BG)
Tel.: +39 035 776400
Fax: +39 035 755020
www.fassi.com
fassi@fassi.com

F110BC.1.23 - Load Diagram

LOAD DIAGRAM WITH LIFTING MOMENT LIMITING DEVICE

FASSI

F110BC.1.23

❖ = Mmax	92 kNm
= Pmax	5400 kg
= Pmax	2745 kg

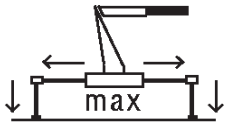

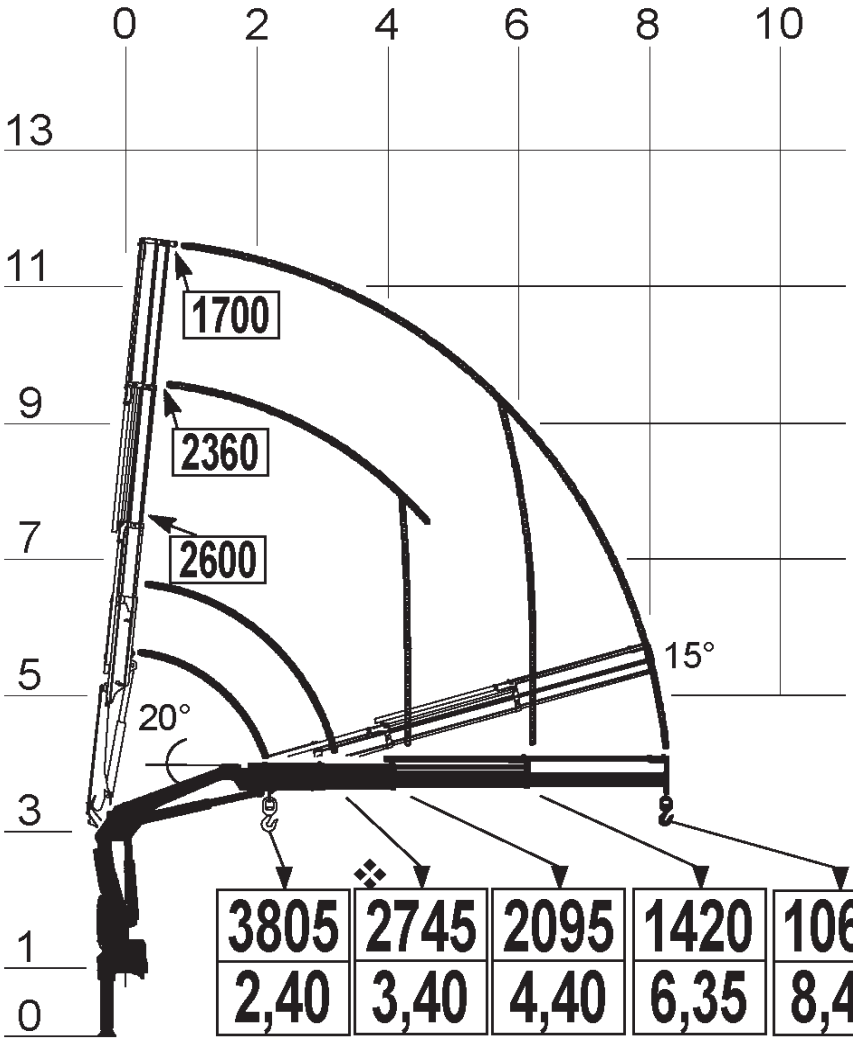

3805	2745 ❖	2095	1420	1065	kg
2,40	3,40	4,40	6,35	8,40	m

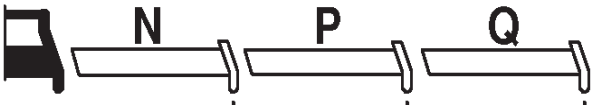

790	590	420	kg
10,55	12,65	14,65	m

kg N (52) P (43) Q (26)

DE 15036